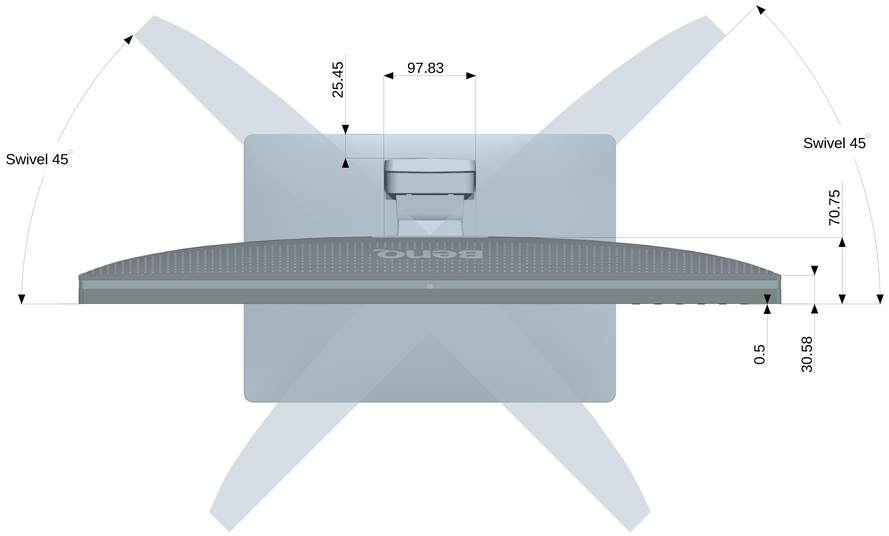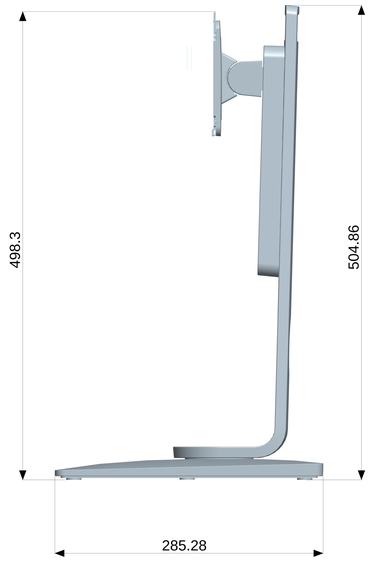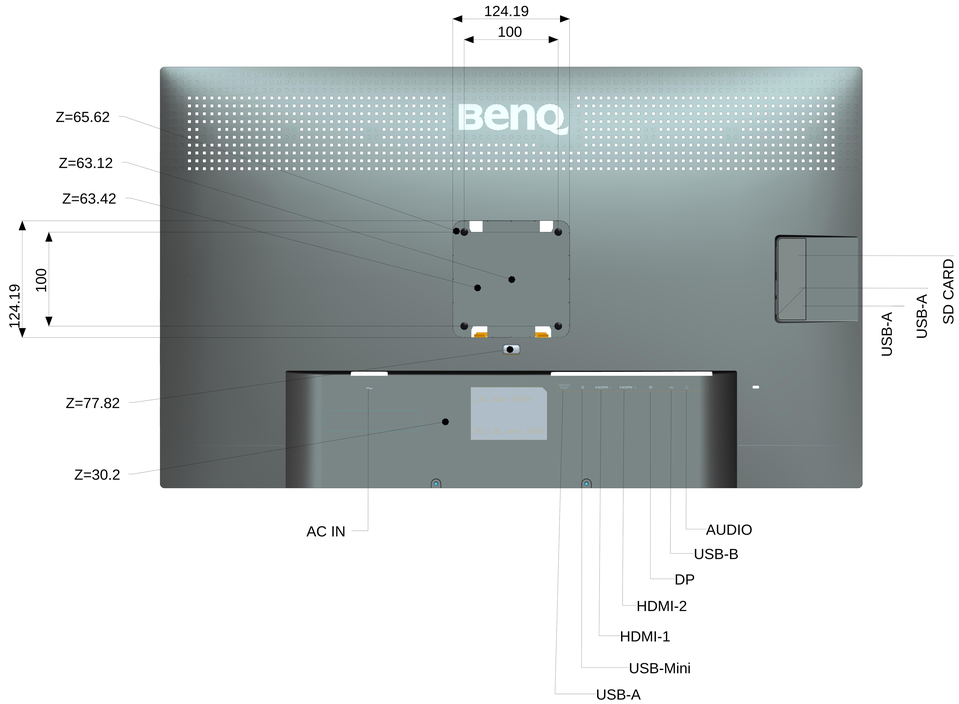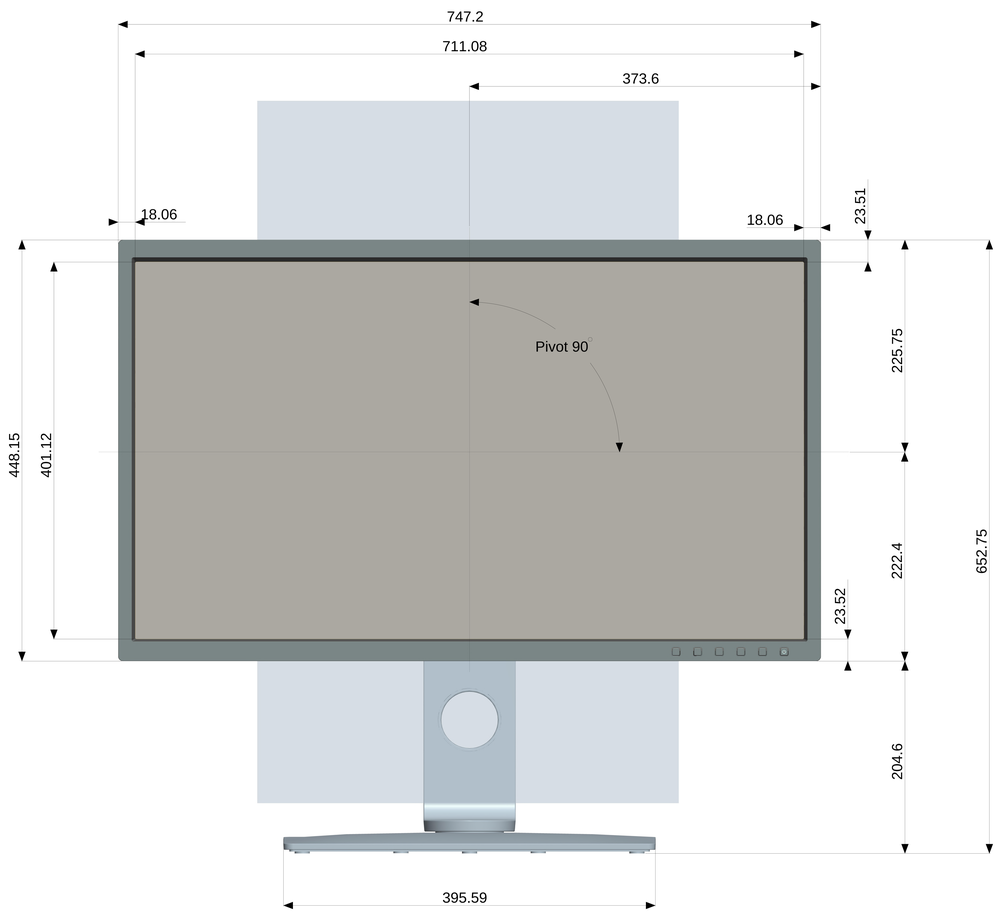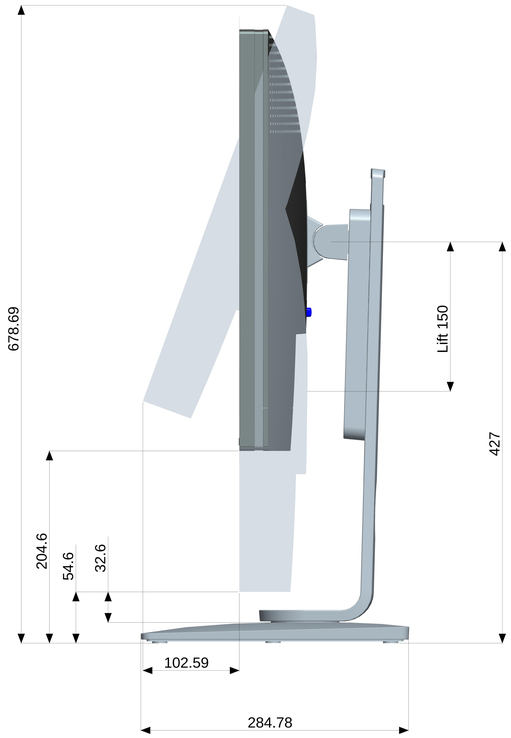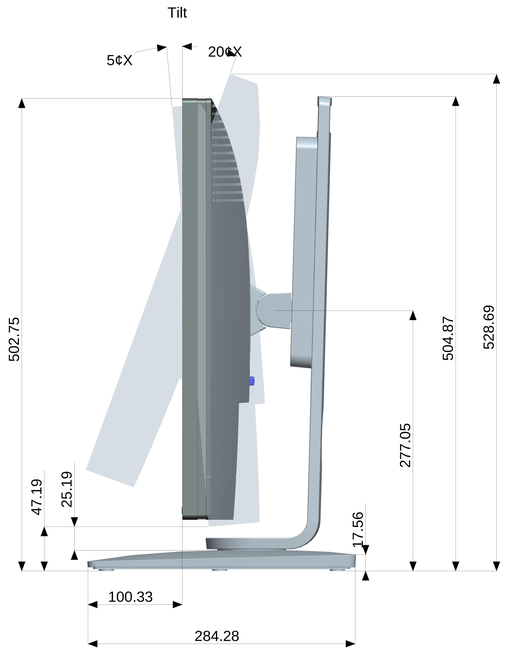BENQ MODEL NAME SW321C
Unit: mm
Dimension: Norminal
Drawing: Not to Scale